EZ53

Tracked Zero Tail Excavators

Best performance of its class

High excavation performance even in hard to reach areas. The EZ53 is the perfect equipment for operations close to walls or buildings. The tail of the EZ53 does not reach over the undercarriage in no operating position at any time. The minimized space requirements are extremely practical on construction sites in busy city centers or on road construction sites with ongoing traffic. But not only its operating dimensions are convincing, also its material handling and digging performance are impressive.

- Remarkably higher engine and hydraulic performances plus reduced fuel consumption at the same time.
- Maintenance made easy: the tiltable cabin and the removable chassis cover provide quick and easy access, diagnostic tools offer further support.
- Perfectly equipped for multi-functional attachment tools: up to five additional control circuits with unpressurised reflux available.
- Numerous options available ex-factory such as: overload valves, idle speed autom. operation and more.

Comfortable cabin

• Spacious cabin for sufficient space for movement.
• Sliding windows on both sides. The front windscreen is divided in two. The lower screen slides up behind the upper, both screens can be moved under the cabin ceiling.

Engine for highest performance
• Remarkably higher engine and hydraulic performances plus reduced fuel consumption at the same time.
• Improved digging performance and more powerful Turbo-Diesel engine provide better material handling results.

zero tail – compact all around
• Zero Tail Excavator for safe operation even in narrow spaces.
• Ideal for excavation jobs close to walls, roads, buildings or other surrounding limitations as in inner cities or busy roads.
• Optional counterweights improve stability.

VDS – vertical digging system
• The first intelligent solution for highest efficiency of excavating jobs on sloping grounds.
• VDS is available as an option for the EZ53
• VDS makes excavating particularly economical and is therefore awarded with the ECO seal.
• More details on VDS under:
wackerneuson.com/vds

Technical specifications

Operating data

Shipping weight min.	4,961 kg
Operating weight min.	5,234 kg
Biting force max.	28 kN
Breakaway force max.	38.1 kN
Digging depth max.	3,751 mm
Dumping height	3,678 - 3,943 mm
Dumping height max.	3,943 mm
Digging radius max.	6,233 mm
Superstructure slewing speed	9.2 1/min
L x W x H	5,500 x 1,990 x 2,572 mm

Engine / Motor

Engine / Motor manufacturer	Perkins
Engine / Motor type	404D-22T
Engine / Motor	water-cooled 4-cylinder diesel engine
Displacement	2,216 cm³
RPM / speed	1,900 rpm

Engine performance acc. to ISO	35.9 kW
Battery	88 Ah
Fuel tank capacity	83 l

Hydraulic system

Duty pump	Double variable- & two-gear pump
Flow rate	106.4 l/min
Operating pressure for working and traction hydraulics	230 bar
Hydraulic oil tank	80 l

Wheel set

Travel speed max.	4.7 km/h
Chain width	400 mm
Ground clearance	322 mm

Dozer Blade

Width	1,990 mm
Height	380 mm
Stroke above ground	415 mm
Stroke below ground	455 mm

Sound level

Sound level (LwA) acc. to 2000/14/EC	94 dB(A)
Cabin - specified sound pressure level LpA acc. to ISO 6394	78 dB(A)

Dimensions

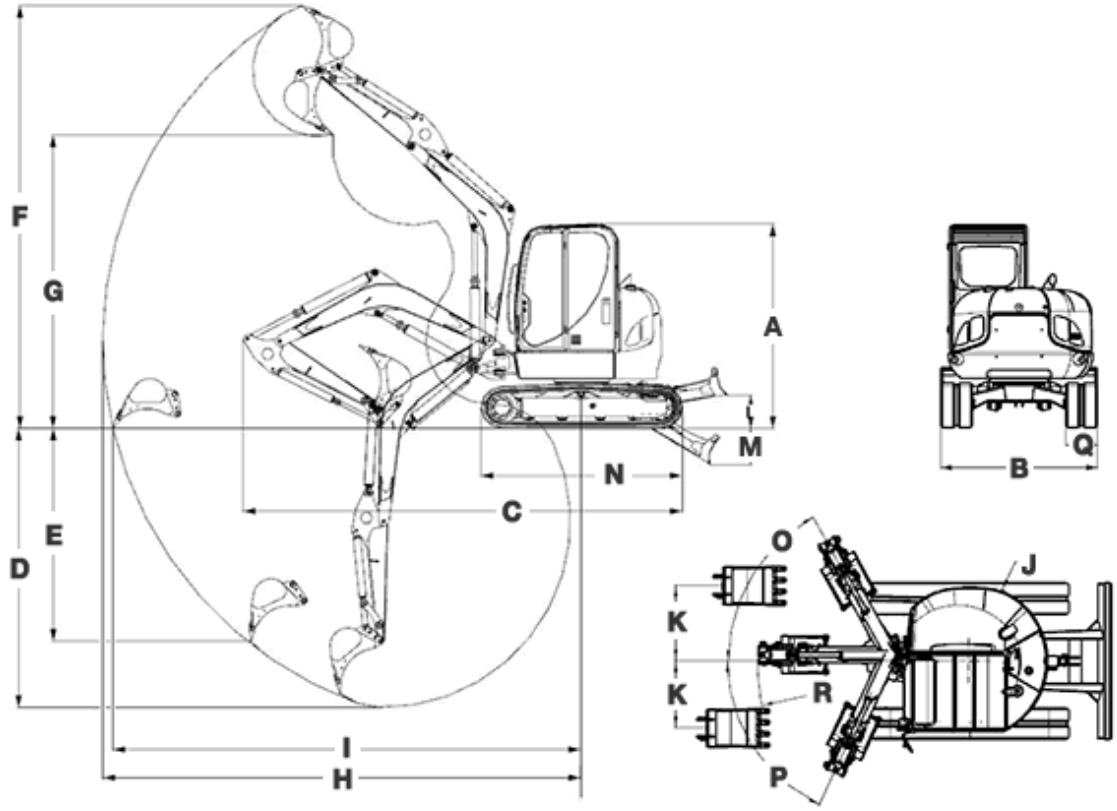

		VDS
A Height mm	2,572	2,672
B Width mm	1,990	1,990
Width Oberwagen mm	1,843	1,843
C Transport length max., kurzer Löffelstiel mm	5,498	5,490
Transport length max., langer Löffelstiel mm	5,477	5,496
D Digging depth max. (short dipper stick) mm	3,501	3,394
D Digging depth max. (long dipper stick) mm	3,751	3,644
E Insertion depth max. vertical (short dipper stick) mm	2,667	2,542
E Insertion depth max. vertical (long dipper stick) mm	2,906	2,781
F Insertion height max. (short dipper stick) mm	5,299	5,405
F Insertion height max. (long dipper stick) mm	5,459	5,564
G Dumping height max. (short dipper stick) mm	3,678	3,784

G	Dumping height Max. (long dipper stick) mm	3,837	3,943
H	Digging radius max. (short dipper stick) mm	5,987	5,994
H	Digging radius max. (long dipper stick) mm	6,225	6,233
I	Range max. ground coverage (short dipper stick) mm	5,860	5,823
I	Range max. ground coverage (long dipper stick) mm	6,104	6,071
J	Rear swivel radius mm	995	995
J	Rear swivel radius with counterweight mm	1,055	1,055
K	Arm displacement max. boom offset to center of bucket, left side mm	958	958
K	Arm displacement max. boom offset to center of bucket, left side mm	853	853
L	Lift height max. of the dozer blade above subgrade mm	415	415
M	Scraping depth max. of the dozer blade below subgrade mm	453	453
N	Length mm	2,524	2,524
O	Turning angle max. of the arm system to the right °	61	61
P	Turning angle max. of the arm system to the left °	65	65
Q	Chain width mm	400	400
R	Boom slewing radius Mitte mm	2,692	2,692
Boom slewing radius rechts mm		2,431	2,431
R	Boom slewing radius links mm	2,289	2,289

Please note
that product availability can vary from country to country. It is possible that information / products may not be available in your country. More detailed information on engine power can be found in the operator's manual; the stated power may vary due to specific operating conditions.
Subject to alterations and errors excepted. Applicable also to illustrations.
Copyright © 2016 Wacker Neuson SE.